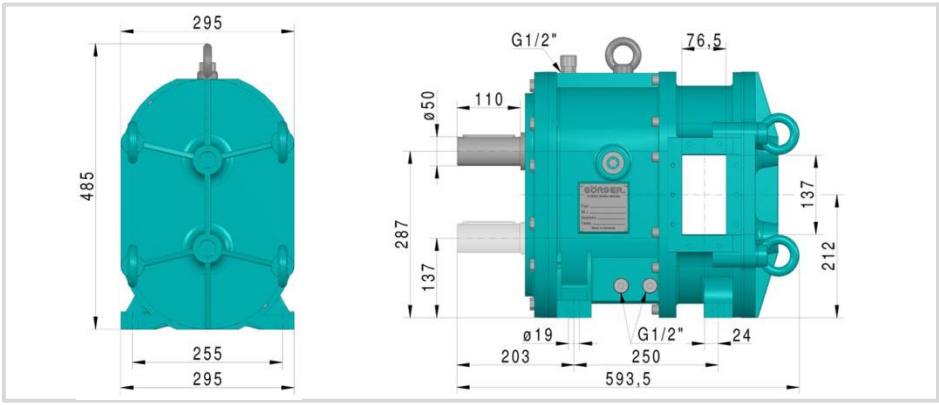

CL 260

Weight: 185 kg
(408 lbs)

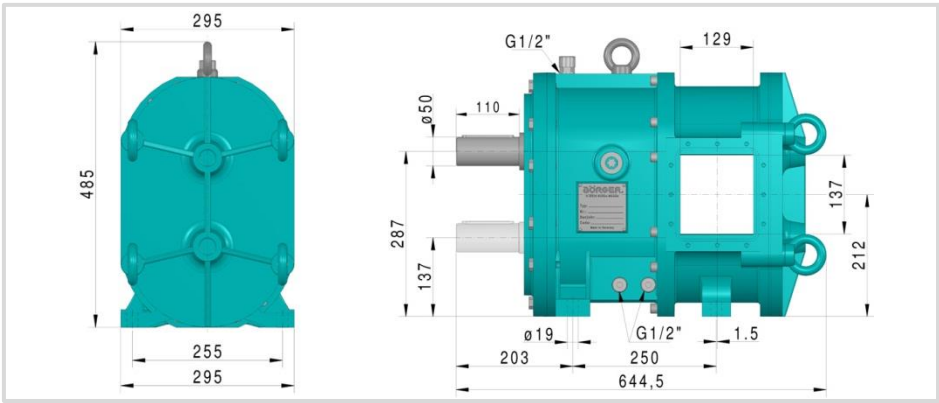

CL 390

Weight: 205 kg
(452 lbs)

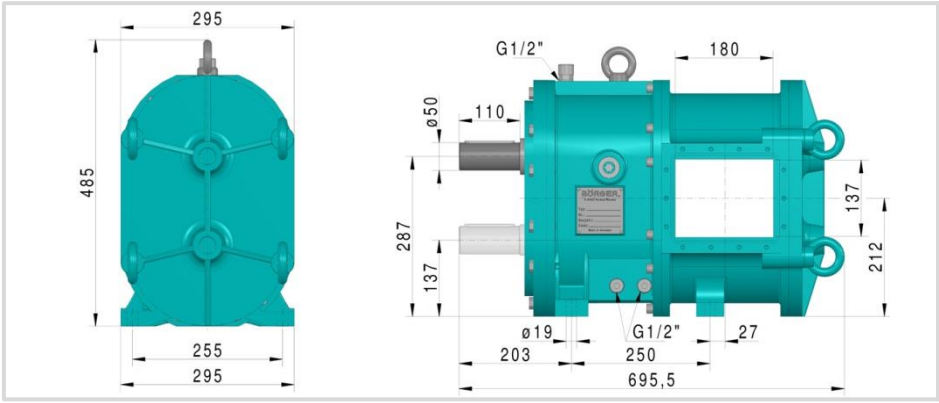

CL 520

Weight: 225 kg
(496 lbs)

Production-related deviations in individual dimensions within an acceptable tolerance cannot be ruled out.
Requests for dimensions regarding a specific order are welcome.